EN

etalbond® d³ COMPOSITE MATERIALS

etalbond® d² COMPOSITE MATERIALS

etalbond® d¹ COMPOSITE MATERIALS

display your imagination

ELVAL COLOUR

Power to imagine

ELVAL COLOUR
Power to imagine

CONTENTS

03 The Company

04 Product Description, Material Properties

05 Applications

06-08 Machining Fabrication Techniques

09 Cassettes Fabrication

10-11 Jointing & Fixing Techniques

12 Fire Classification

13 Surface, Transportation, Storage & Protection, Certifications

14-15 Technical Characteristics & Packing Instructions

17&19 Colour Samples **etalbond**® d^3

Elval Colour's products **etalbond**® d^3, d^2, d^1 represent the category of **etalbond**® for signage and display.
The letter "d" signifies the word display and the number signifies the thickness of the aluminium.

Elval Colour is a leading European coated aluminium manufacturer which produces a full range of aluminium display, façade and roofing products of latest technology.

With more than 40 years of experience in coating and colour matching, Elval Colour is a reliable partner that offers added value services to customers by assisting in product specification and selection to best suit the needs of the project/application. Customer orientation and dedication accompanies production and product delivery.

Elval Colour is a member of the European Coil Coating Association (ECCA), the European Aluminium Association, and is ISO 9001:2015, ISO 14001:2015, ISO 50001:2018, ISO 45001:2018, and ISO 14064:2018 accredited.

PRODUCT DESCRIPTION

With its high-quality, resilience and unique appearance, **etalbond®** offers sustainable construction quality and high creative standards. Due to its outstanding product properties, this material stands-out. Elval Colour's products **etalbond®d³**, **etalbond®d²**, and **etalbond®d¹** for signage and display are sandwich type aluminium composite panels. They are produced using two aluminium sheets with either an LDPE core or a Fire Retardant* core (only **d³**), resulting in a total thickness of 2-6mm.

etalbond®d³, **d²**, **d¹** are lightweight panels which incorporate a number of excellent properties for processing and installation, while they are easy to handle and transport at the same time.

*class B-s1, d0, under the conditions mentioned in the classification report (EN 13501-1)

Material Properties

- Extremely flat surface.
- Lightweight with high stiffness and excellent dimensional stability.
- Ideal for large format applications (installations), using well known processing techniques (width 1000-2000mm).
- Easy to fabricate (bending/folding only **d³**), simple to process with conventional machines for plastic and wooden fabrications.
- Operational working temperature ranging from -20°C to +80°C.
- Minimal environmental carbon footprint.
- Available in a variety of sizes and colours (see Technical Data Sheet and Colour Chart).

Specifically:

etalbond®d³ is the highest positioned product:

- very strict thickness tolerances per sheet (± 0,05mm) which allow perfect digital printing result
- up to 10 year warranty due to its highly resistant outdoor usage: UV-resistant, excellent corrosion resistant, heat-resistant, lower thermal expansion than plastics
- has a highly linked polyester coating designed for digital printing and outside shop and pylon claddings
- able to utilize the rout and return technique (as described on page 8)
- available also with a fire retardant core
- available also in 6mm thickness
- available in many different surfaces (butler finish, colours etc.)

etalbond®d²

- digital printing application
- rout and return recommended only for experienced fabricators
- limited colours available (white, silver, black)
- mostly flat applications

etalbond®d¹

- no rout and return possible
- available in 1500mm width and white of mill finish surface

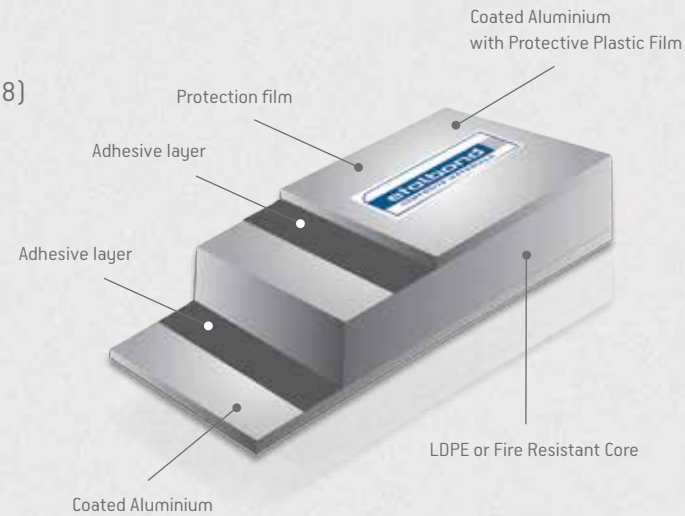

APPLICATIONS

Ingenuity and creativity in design create new applications every day. With **etalbond®d³**, **etalbond®d²**, and **etalbond®d¹**, Elval Colour covers effectively and efficiently all applications and acts as your partner in designing tailor made solutions to cover your needs.

- Signage
- Silk-screen and digital printing industry
- Outdoor advertising
- Exhibition areas (as stands and room partitions)
- Bus stops
- Gas stations
- Decoration material
- False-ceilings
- Elevator/stair-wall facings
- Indoor cladding
- Industrial applications like machine cladding, bus interiors and train roofing

MACHINING FABRICATION TECHNIQUES

Saw Cutting

Existing machinery and tooling for woodworking and metal can be used to sawcut **etalbond**®. A standard circular saw for aluminium sheets may be applied also for **etalbond**® in the same way. A carbide tip blade made for aluminium and plastic is recommended. The cutting needs to be done on the reverse side of the panels. Portable circular saws can be operational on small projects, provided they are equipped with a system of guides to ensure the cutting in straight lines.

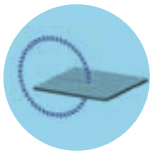

Contour Milling

Milling cutters are cutting tools used in milling machines. They remove material by their movement within the machine or directly from the cutters shape. **etalbond**® can be cut to shape applying contour mills which are part of CNC machining. For **etalbond**® we recommend to adopt a milling bit with helix flutes (deep helical grooves) running up the cutter. A state-of-the-art way to cut **etalbond**® panels in size, is the use of an automated CNC machine.

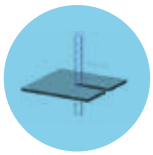

Contour Cutting

etalbond® can be cut to shape using jig saws and more rarely scroll saws. The most important part of the saw is the blade. When cutting with jig saws, we recommend to apply saw blades for wood and plastic material. The higher the number of teeth, the smoother the finished cut. It is necessary to cut at the reverse side of the panel.

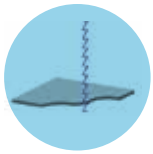

Punching

etalbond® panels can be punched using standard metal punching machines. The punching of flat **etalbond**® is performed exactly the same way as in the aluminium sheets.

Punching will cause a slight deflection of the cut edge on the impact side. To reduce aluminium edge roundness, set the clearance of punch and die to be minimal (panel thickness x 0,05).

The minimum diameter for a punched hole is 4mm. The minimum width of web between the hole edges is also 4mm.

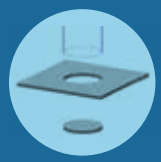

Shear Cutting

etalbond® can be easily sheared deploying rotary shears or guillotine shears with advanced cutting technology. Square shear is the most efficient method to size a large quantity of panels. The tolerance between the shearing blades must be regulated to prevent excessive edge rounding of the upper side of the panel.

Drilling

etalbond® can be drilled with standard twist drills used for aluminium and plastics on machinery common for metals. Holes can be made on **etalbond®** with a hand drill or a drill press, with a drill bit or circle cutter. Chips removal during drilling process can be obtained by using a high rpm low feed and by occasionally lifting up the drill.

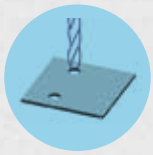

Cleaning of the Edges

In case burr occurs on the cut edges, or the edges need to be rounded, a common handheld scraper can be used after cutting, for smoothing out. We also recommend an abrasive pad for cleaning or deburring the edges of **etalbond**®.

Rout and Return

Standard processes used in metal and plastics industry can also be utilized for joining **etalbond**®. If **etalbond**® is to be joined to extrusion profiles or structural framing then, taping screws, rivets, bolts and nuts can be used. Structural adhesives and double faced high strength tapes can also be used in conjuction with mechanical fastenings. Normally, 35 or 50mm from edge is grooved and folded. After assembly the corner is sealed with sealant to prevent the corner slit from water leakage. The corner is fixed with aluminium blade or aluminium corner blade.

Folding

U-grooved panels can be folded with folding jig, pressbrake or a plate punch. To ensure a straight line of folded corner, fold the grooved panel on a flat workbench. It is recommended that the folding operation is being executed at 10°C or a higher temperature. Work directions: For shaped elements with a radius between 2 to 3mm proceed as follows: First a V-shaped or rectangular groove is routed by a milling cutter on the inside of the fold, ensuring 0.3 ± 0.15mm of core material is left on the lower cladding sheet. The base of the groove should always be flat and about 2 to 3mm wide. In general the folding radius is determined by the shape and depth of the groove. It is advisable that several trials are made before the start, to insure the required folding radius in **etalbond**® cassettes.

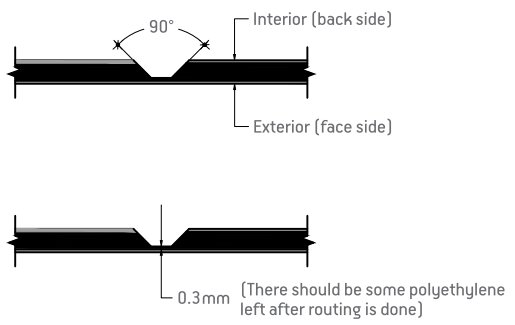

"V Routing"

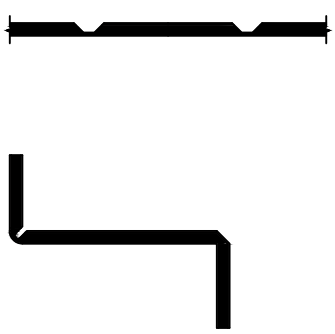

CASSETTES FABRICATION

1. Leave a minimum space from the edge of the panel to ensure the squareness and geometry of the cut out shape
2. Routing
3. Cut off corner edge
4. Cut off slots
5. Drill holes
6. Side turn
7. 90° turn on second routing line
8. Close corner element
9. 90° turn on outside routing line

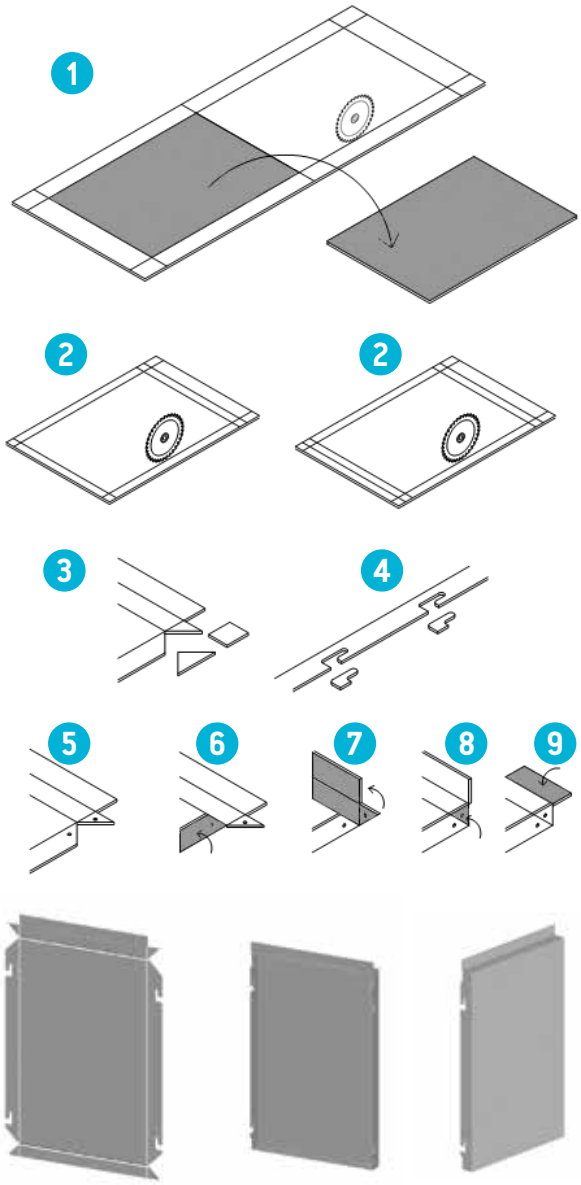

JOINTING & FIXING TECHNIQUES

Riveting

etalbond® panels can also be fastened together or joined to aluminium extruded elements with inox or aluminium blind rivets or bolts. In fastening with rivets there should be one fixed point at the middle of the **etalbond**® work piece. The other fastening points should be made flexible with sufficient hole play. Rivets head should always be large enough to cover the bore hole over 1mm in the panel. If blind rivets are to be used make use of special wide closing heads or tightly fitting washers for the protection of **etalbond**® surface. The suggested rivet shaft diameter should be 5mm while the rivet head diameter should be from 11 to 14mm. The thermal expansion of the aluminium panel should be taken into consideration for this and to avoid problems the hole on the panel should always be larger than the rivet shaft to allow for expansion.

Screwing

Where connections with screws are concerned the same technical requirements apply as with rivet connections. In selecting screw material, care should be exercised to ensure that the connectors do not corrode. For this reason, the use of aluminium or stainless steel screws is recommended. Aluminium or stainless steel screws are installed through pre drilled holes. Similarly to riveting, the thermal expansion of **etalbond**® should be taken into account.

Please note: It is important to remove the protective film in the screwing area prior to screwing or riveting.

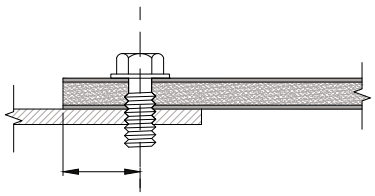

15mm minimum

Gluing

Adhesives can be used along with double face tape (e.g. 3M VHB) for fastening **etalbond**® temporary on flat surfaces such as walls, ceilings, furniture, coverings etc.

Adhesive sealing compounds for high strength and elastic connections for interior uses we recommend the usage of either SIKAFLEX 252, SIKAFLEX 11FC, SIKA Bond –T2 or Prosyflex 3000 by Tremco.

Please note:

Prior to any adhesion work clean carefully the area to be adhered. Select most appropriate adhesive that ensures adhesion integrity in the atmospheric conditions where it is applied. Always pretest adhesives before fabrication and installation and subject the samples to possible working temperatures to observe possible distortions due to shrinkage of adhesive or deflections due to different thermal expansion rates of the joined components.

FIRE CLASSIFICATION

etalbond® d3

	PE CORE		FR CORE	
Country	Test according to	Classification	Test according to	Classification
EU	EN 13501-1	E	EN 13501-1	B-s1, d0
Germany	DIN 4102-1	B2	DIN 4102-1	B1
United Kingdom	BS 476-part6 BS 476-part7	I<12, i1<6 Class 1		
Italy	CSE RF-2/75/A CSE RF 3/77	1		
Australia			AS/NZS 3837	Group 3

etalbond® d2

	PE CORE	
Country	Test according to	Classification
EU	EN 13501-1	E
Germany	DIN 4102	B2

Surface

Elval Colour is working together with the leading liquid paint suppliers and designs the respective surfaces according to their specific application achieving optimal results for the customer. The enclosed metal samples show the original surfaces in the various colours, gloss levels and quality. The painted surface of coil coated metal, offers the highest performance compared to all other coatings due to:

• **The uniformity of cleaning**, pretreatment and coating made by a highly controlled coil coating process.
• **The well-defined nature of the liquid paint layers** designed for the specific application and the basis for printing.

Storage & Protection

• **etalbond®** sheets must be stored in dry and well ventilated places, at normal temperature conditions.
• Store the flat panels in pallets in indoor atmosphere to minimize the degradation of the protective film by the direct sun light. Do not store the material outside. Temperature and humidity differences will cause water condensation.
• Placing the pallets one on top of the other is only allowed for pallets of the same size and for a maximum of three (with no more than 40 sheets each).
• The protective film ensures the protection of the coating during packing, handling, transportation and installing. To avoid colour inconsistencies it is recommended to install the panels using the same arrow direction that are printed on the protective film surface.
• For full storage and protection guidelines, refer to the **etalbond®** **d^3**, **d^2**, **d^1** **FR** Technical and processing manual.

Transportation

During transfer **etalbond®** sheets should be secured against slipping. The **etalbond®** pallets must be always closed during loading and unloading. For full transport guidelines, refer to the **etalbond®d^3**, **d^2**, **d^1** **FR** Technical and processing manual. Material should be stored inside away from direct sunlight.

Certifications & Fire Classification

etalbond®d^3 and **etalbond®d^2**, comply with the essential requirements, and performance levels, for the display products.

etalbond®d^3 and **etalbond®d^2** in Snow White SG are certified for use with HP Latex Inks and are fully compatible for digital printing with the Latex R1000/R2000 series.

etalbond® are rolled and coated in the company's facilities with the outmost care and in compliance with the most demanding European and Global norms.

Technical Characteristics

	Unit	etalbond® d3				etalbond® d2				etalbond® d1			
Panel Thickness	mm	2	3	4	6	2	3	4	6	2	3	4	6
Aluminium Layer	mm	0.3				0.2				0.15			
Weight	kg/m²	2.9	3.8	4.8	6.6	2.6	3.5	4.4	6.2	2.4	3.3	4.3	6.1

Dimensional Torelances

Panel Thickness	mm	±0.2	
Panel Width	mm	-0.00/+4.00	-0.00/+8.00
Panel Length	mm	≤4000mm: -0.0/+4.0 4001 - 6000mm: -0.0/+6.0 6001 - 8000mm: -0.0/+10.0	
Rectangularity/diagonal difference	mm	3.00mm	
Linear thermal expansion coefficient	mm/m	2.4mm/m for Temperature difference of 100⁰C	

Surface Properties

Paint Thickness Tolerances according to EN 1396	µm	22	18	15
Pencil Hardness		min H		
Dents, marks,hits, grooves, stains etc. acceptable when not visible at an angle of 90⁰ and at a distance of:		≥2m		
Protective film		An area of 5mm max, from each edge might be without protective film unless otherwise agreed with the customer		

Other Properties

Alloy/temper of the aluminium cover sheet		EN AW - 3105/H44 or 4116/H44	4116/H46
Core: Density of Polyethylene, Type LDPE	g/cm³	0.92	

Notes: Material before use should be stored inside, away from direct sunlight.
It is advisable to remove the protective film within 6 months after goods receipt. Beyond this period there is a possibility that the protective film might leave remnants of adhesive on the surface.

Indicative Packaging Instructions

etalbond® d3

	2mm				3mm						
Width (mm)	1000	1250	1500		1000		1250	1500		2000	
Length (mm)	4050	2550	3050	4050	2050	2550	2550	3050	4050	3050	4050
Sheets / Pallet	80	110	75	55	130	110	85	55	45	40	30

	4mm						6mm	
Width (mm)	1000	1250	1500		2000		1500	
Length (mm)	3050	2550	3050	4050	3050	4050	3050	4050
Sheets / Pallet	70	70	45	35	35	25	35	25

etalbond® d2

	2mm			3mm						4mm					
Width (mm)	1000	1250	1500	1000	1250	1500		2000		1000	1250	1500		2000	
Length (mm)	2050	2550	3050	2050	2550	3050	4050	3050	4050	2050	2550	3050	4050	3050	4050
Sheets / Pallet	200	150	80	150	90	60	45	45	35	120	75	50	35	35	25

etalbond® d1

	3mm	
Width (mm)	1500	
Length (mm)	3050	4050
Sheets / Pallet	65	45

The technical characteristics and colour shades are indicative and Elval Colour retains the right to change any technical characteristics of the products if deemed necessary.

CHANEL

COLOUR SAMPLES **etalbond® d³**

Snow White Matte

Snow White High Gloss

Black Matte

Black High Gloss

Silver Matte

Silver High Gloss

Buttler Finish Matte

Copper Brushed

vodafo

SBC

aier
Hai

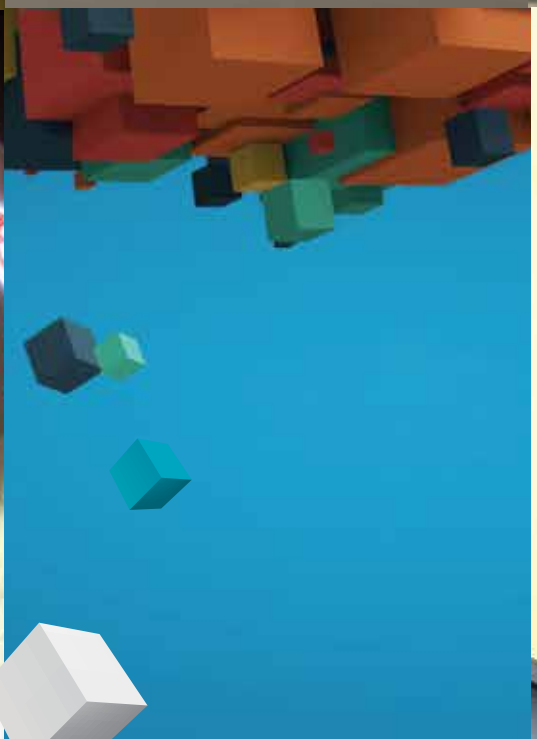

GAP

COLOUR SAMPLES **etalbond® d³**

Red High Gloss

Red Matte

Blue High Gloss

Blue Matte

Green High Gloss

Yellow High Gloss

Anthracite High Gloss

Mirror

Energy P.6070

Elval Colour
3rd Km Inofyta Peripheral Rd.
320 11 Saint Thomas Viotia, Greece
tel: +30 22620 53564, fax: +30 22620 53581
ecs@elval-colour.com

www.elval-colour.com

ELVAL COLOUR
Power to imagine